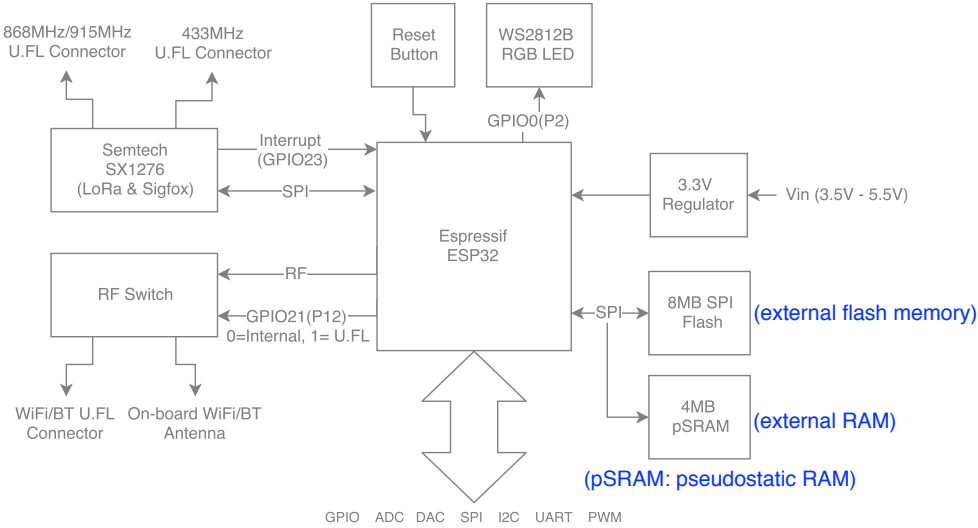
868MHz/915MHz
U.FL Connector
433MHz
U.FL Connector
Reset
Button
WS2812B
RGB LED
GPIO0(P2)
Semtech
SX1276
(LoRa & Sigfox)
Interrupt
(GPIO23)
SPI
Espressif
ESP32
3.3V
Regulator
Vin (3.5V - 5.5V)
RF Switch
RF
GPIO21(P12)
0=Internal, 1= U.FL
SPI
8MB SPI
Flash
(external flash memory)
4MB
pSRAM
(external RAM)
(pSRAM: pseudostatic RAM)
WiFi/BT U.FL
Connector
On-board WiFi/BT
Antenna
GPIO ADC DAC SPI I2C UART PWM